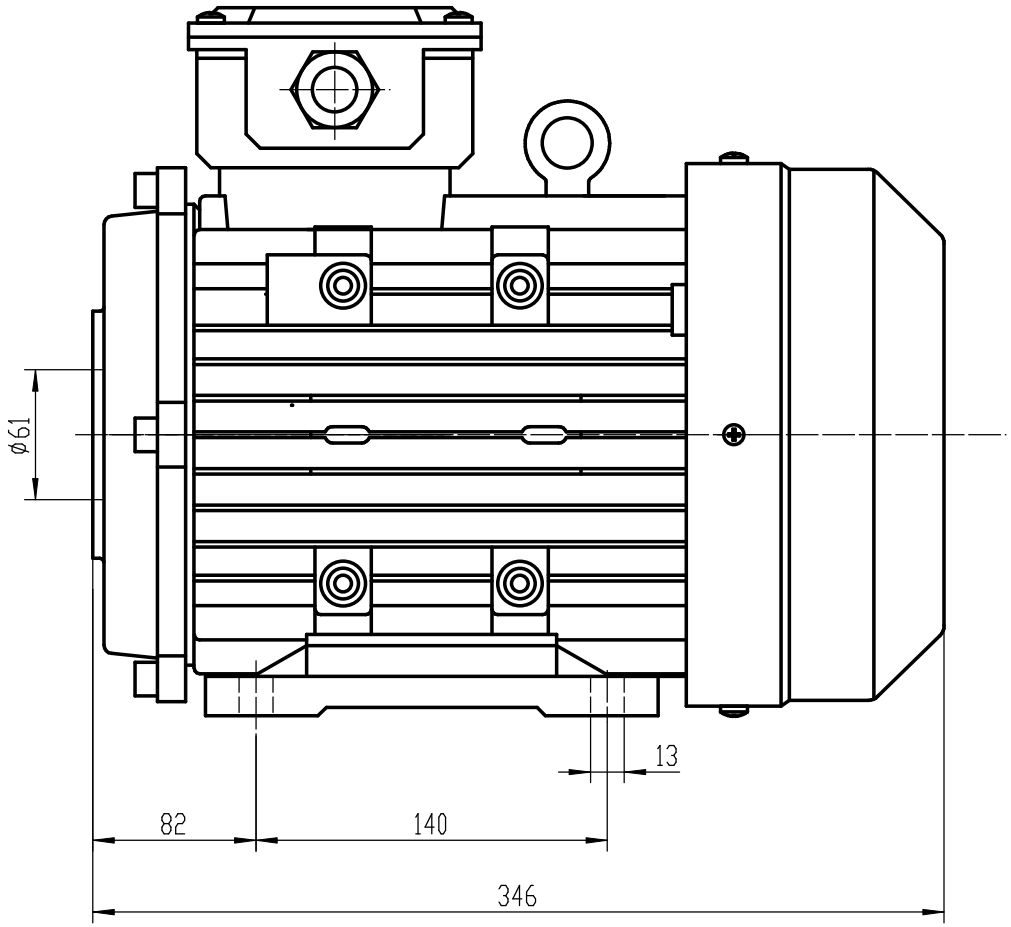

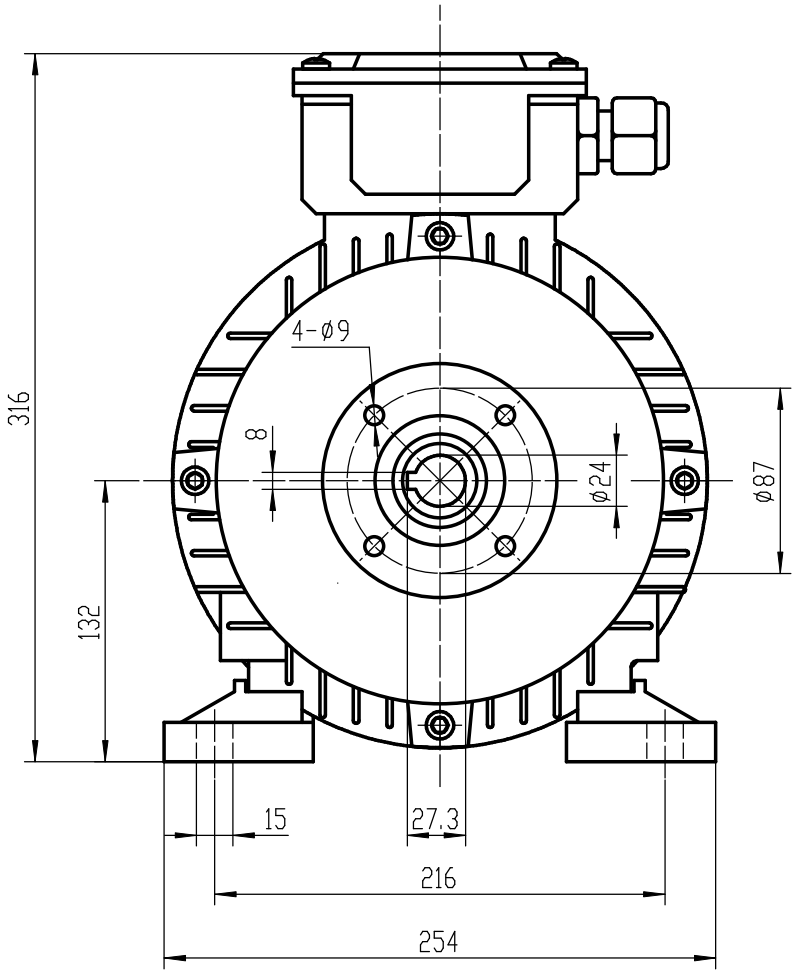

Three Phase Motor
Type:HS132S2-4
Output: 7.5KW
Insulation class: F
Protection class: IP55

							HS132S2-4 7.5KW Motor hollow shaft